BEDIA Motorentechnik GmbH & Co. KG, Altdorf bei Nürnberg

Any non-compliance shall obligate the violator to compensate for damages. In case any patent is issued or a utility model is registered, or in case of any other industrial property rights, all such rights must be reserved for us.

The copyright to this drawing belongs to us. No duplication or transfer to, providing access to or communicating to any third parties is allowed of its contents or excerpts thereof. This drawing may not be used without our approval for any purpose other than that for which it has been entrusted to the recipient.

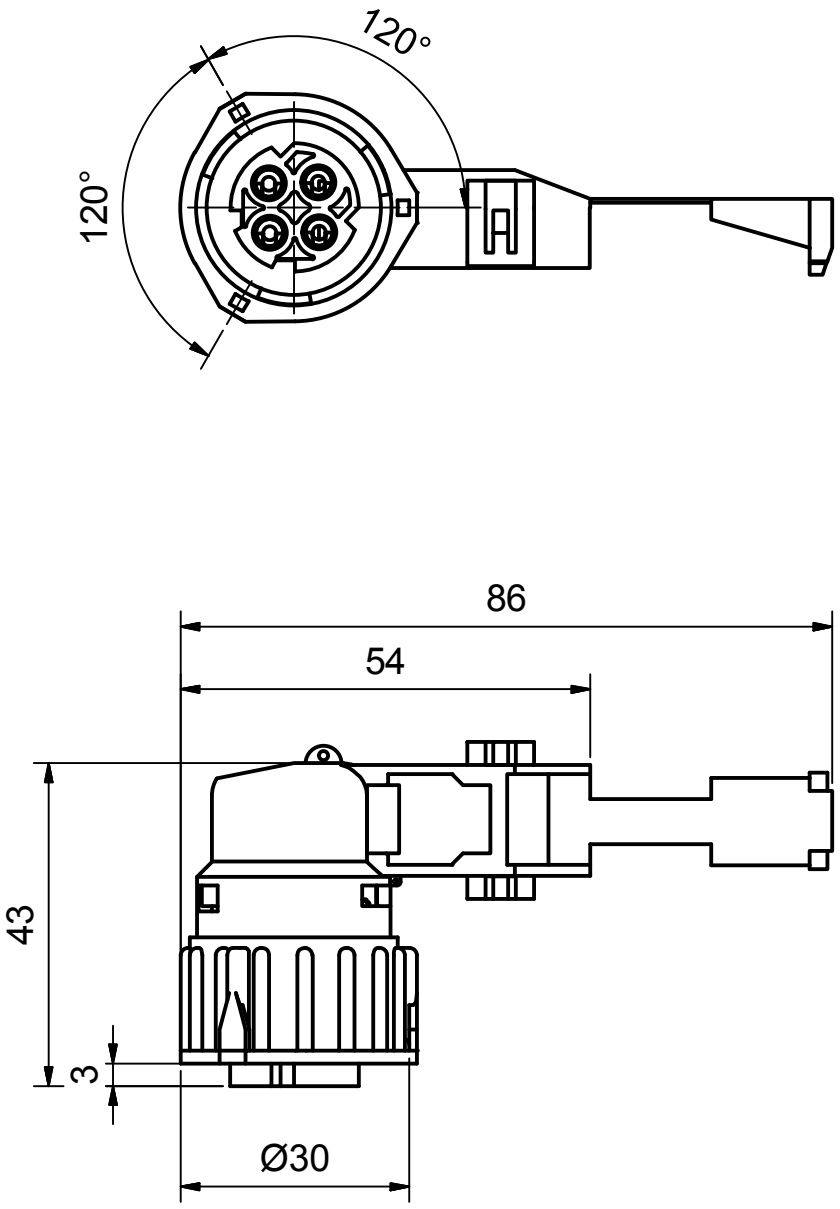

field of application	admissible tolerance	surface	scale 1:1	position –	amount –
	-				

		date	name
created by		13.06.2003	MoeMi
checked by		12.11.2003	ZibGu

rev.	modification	date	name/checked by
a	new norm	25.04.12	MoeMi/StaRo

description

4-pole connector 90°

ISO 15170-B1-4.1-Sn/K1
(former DIN72585) (a)

drawing number

420702

sheet 1/1

drawing path: I:\CAD\420\420702US.idw